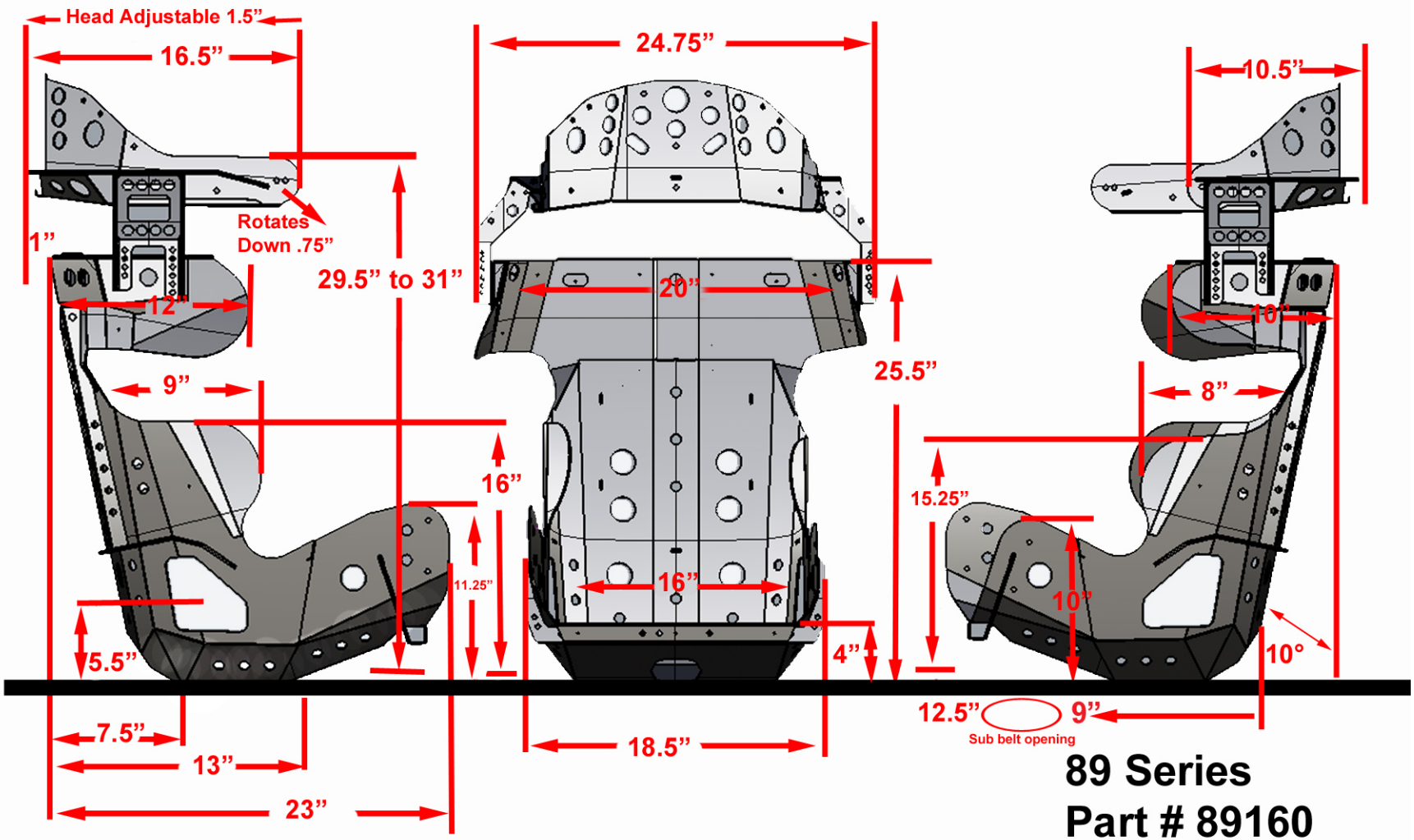

89 Series

Part # 89160

Weighs 25.55lbs

with cover